ZT411, ZT421

P1110714-001

1

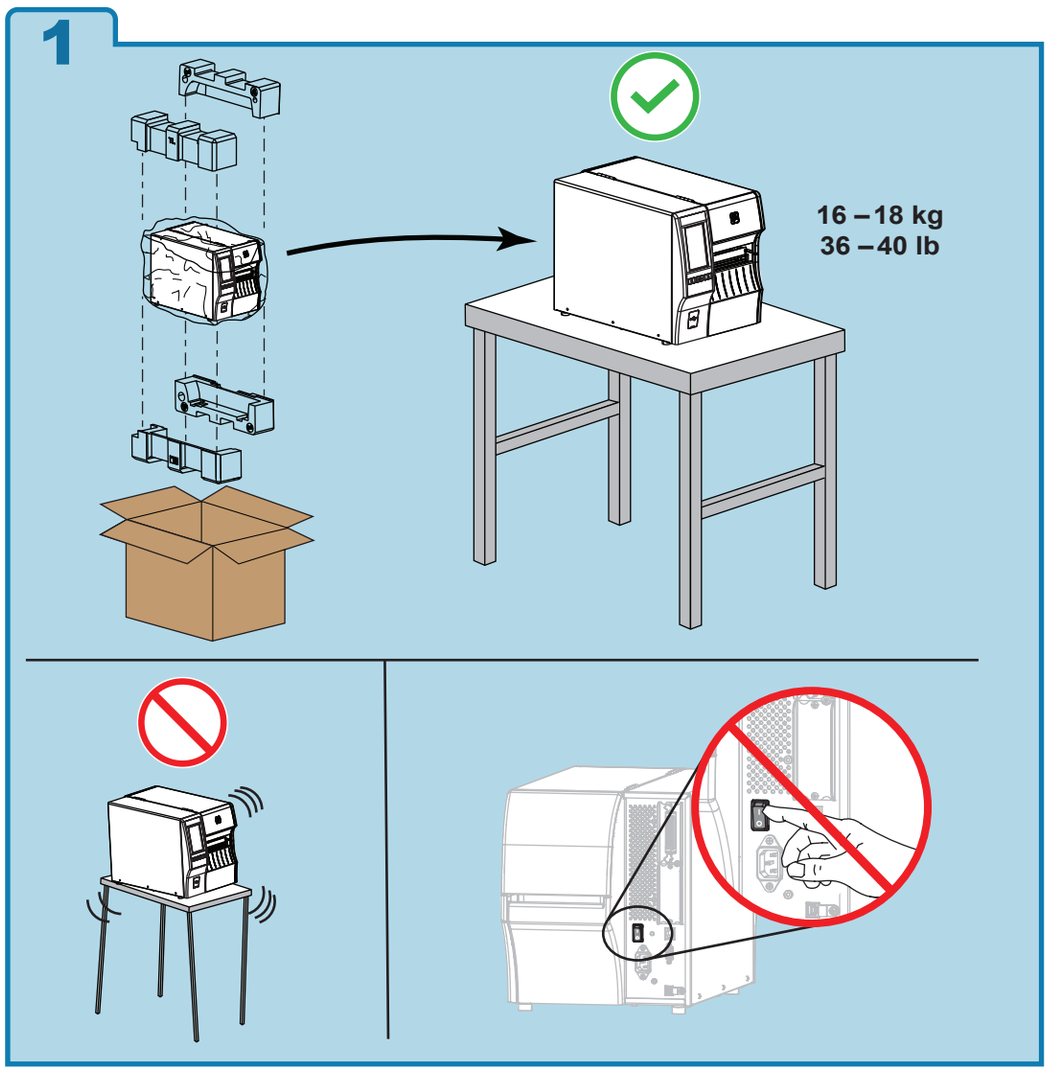

2

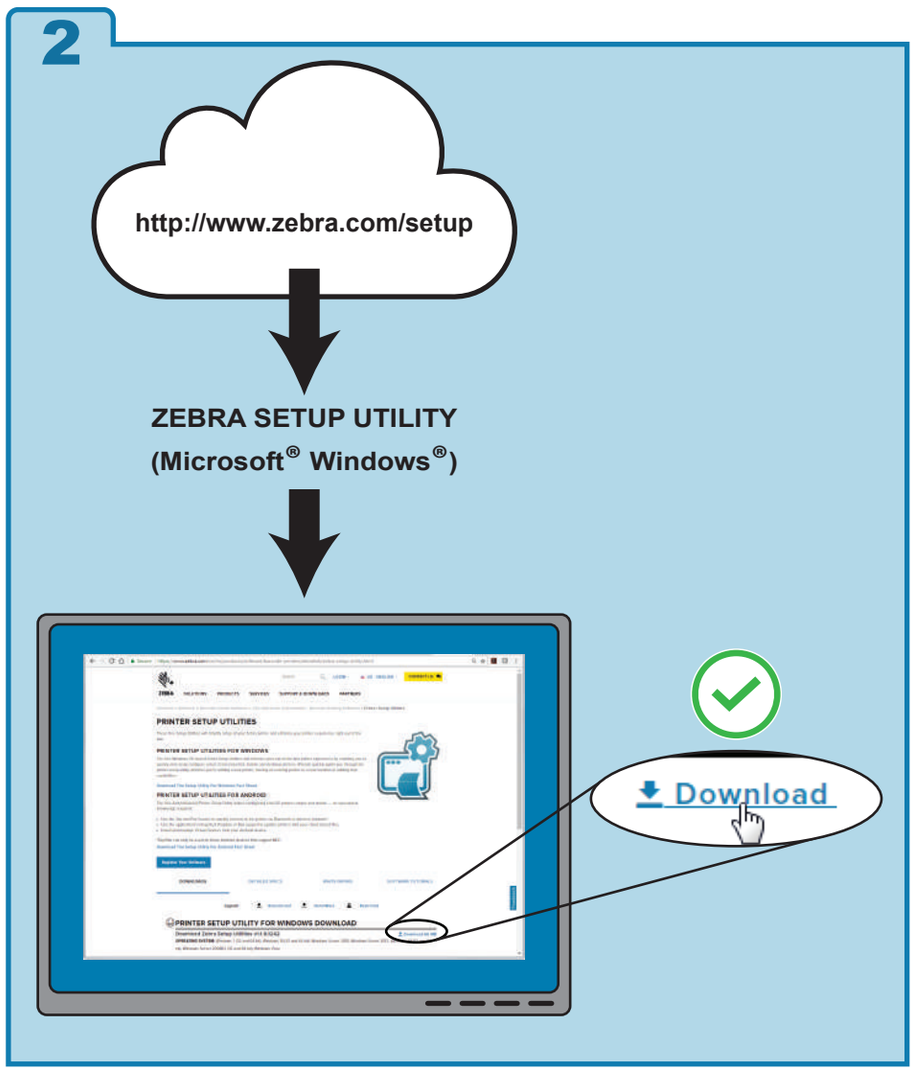

3

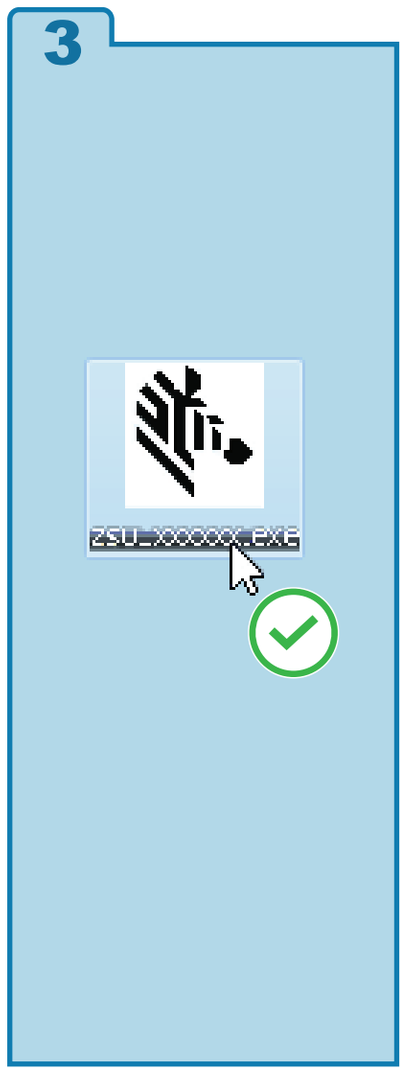

4

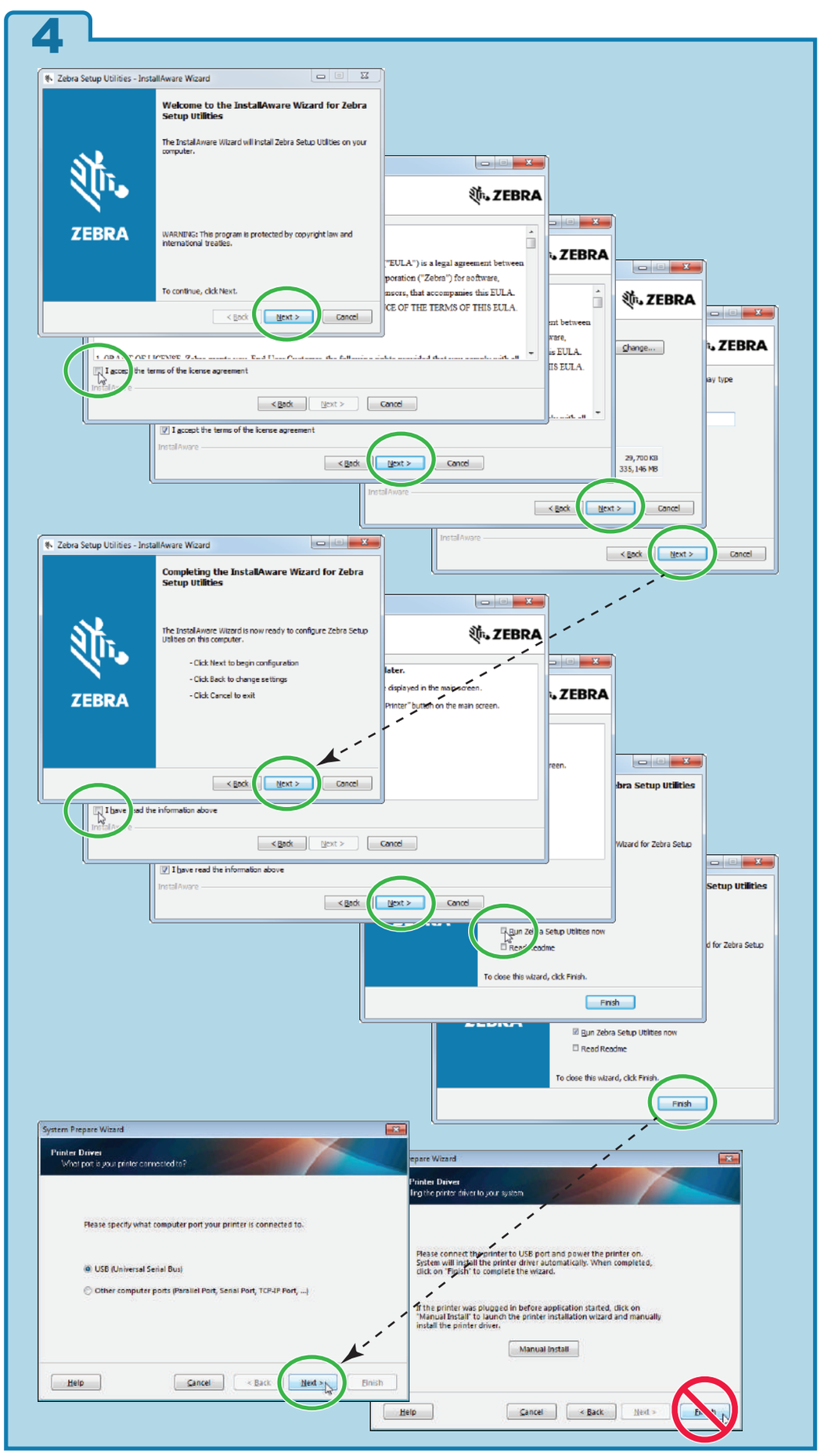

5

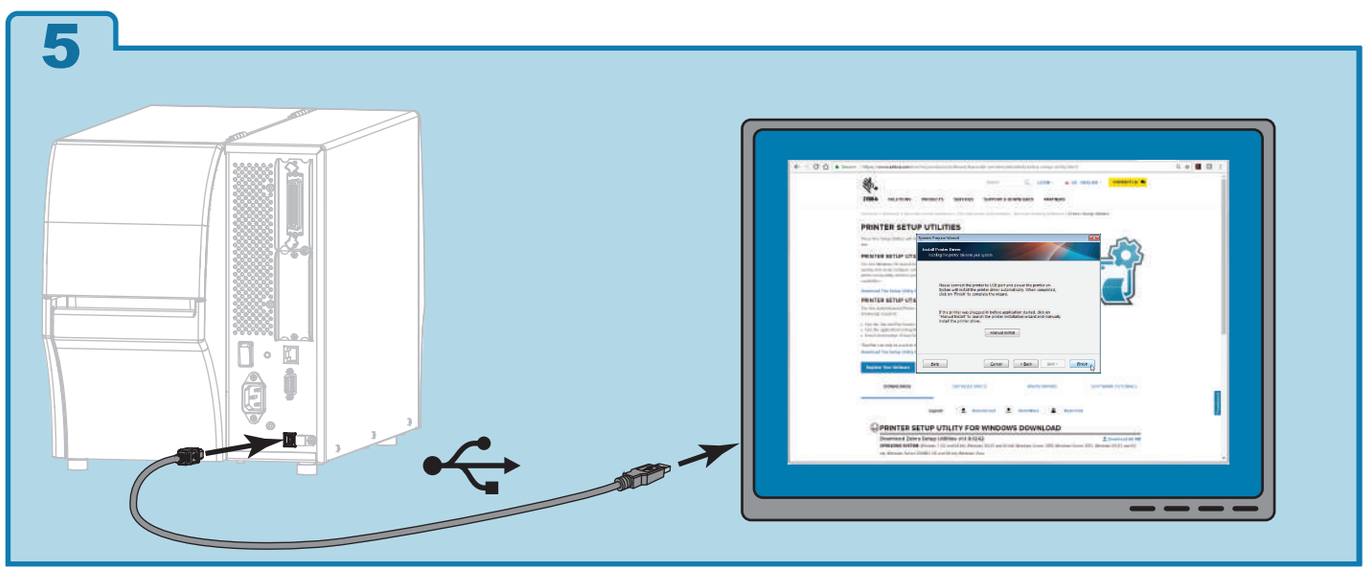

6

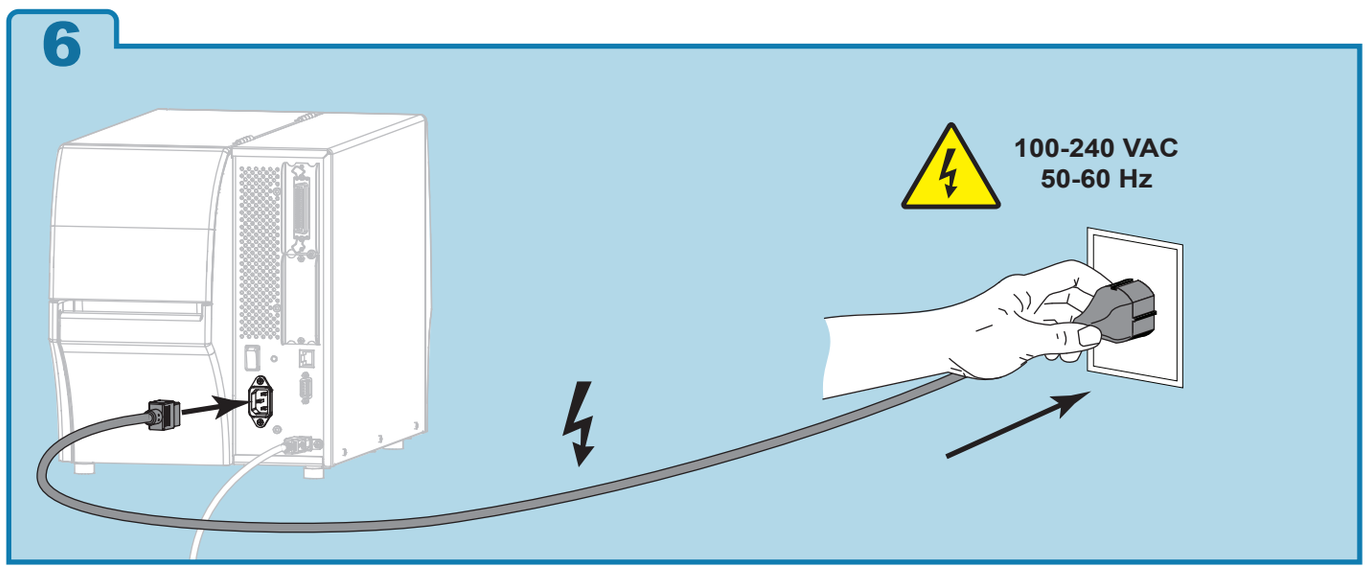

7

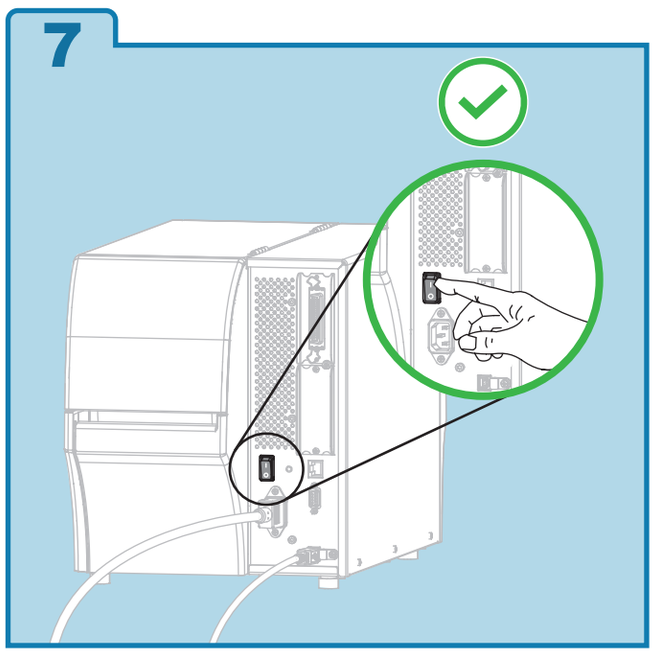

8

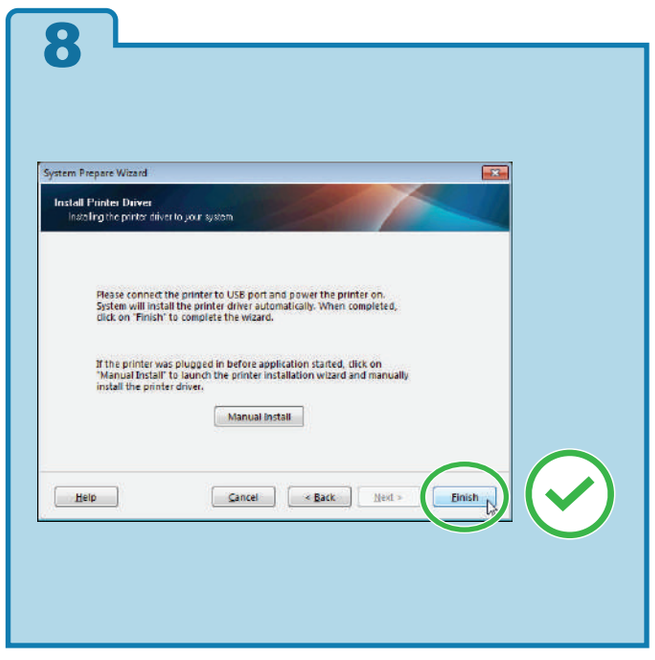

© 2019 ZIH Corp. and/or its affiliates. All rights reserved.

ZEBRA

http://www.zebra.com/zt400-info

1

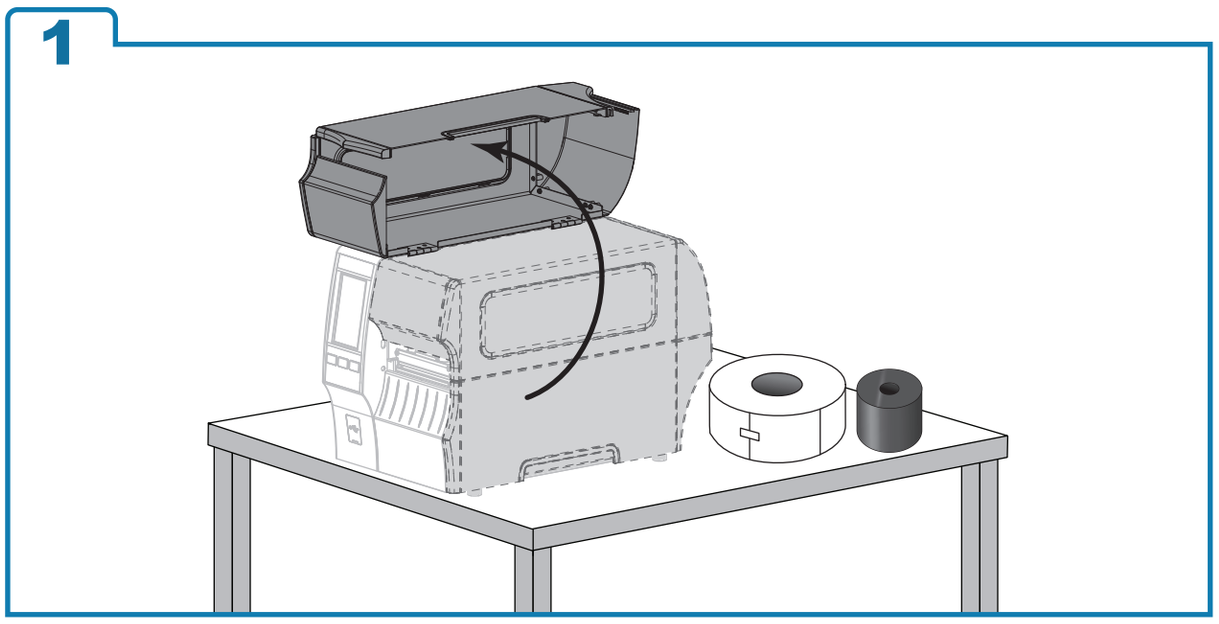

2

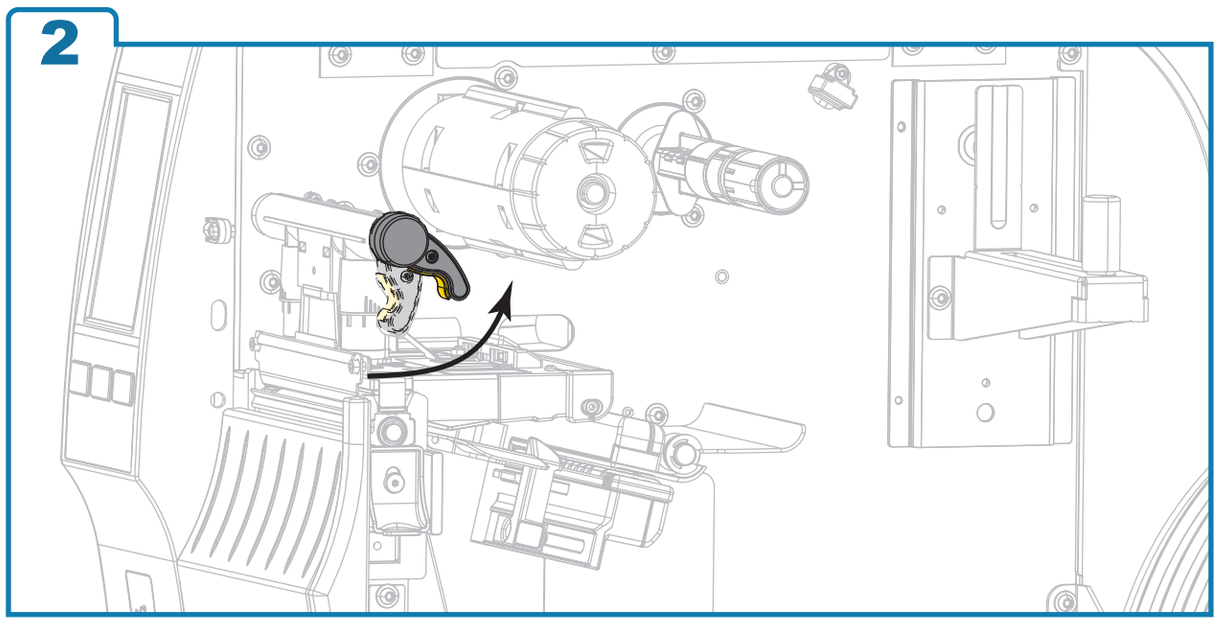

3

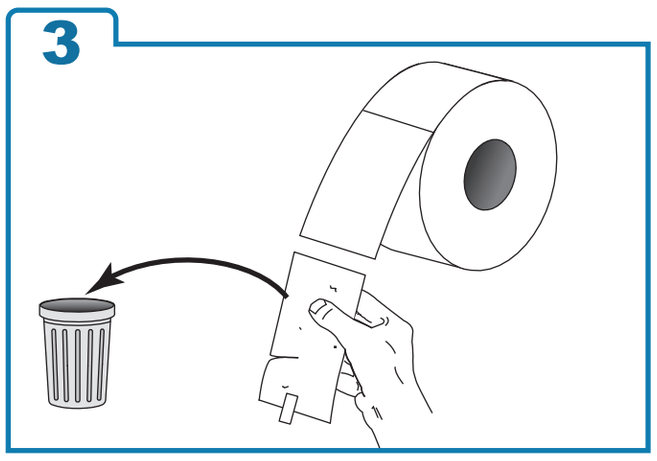

4

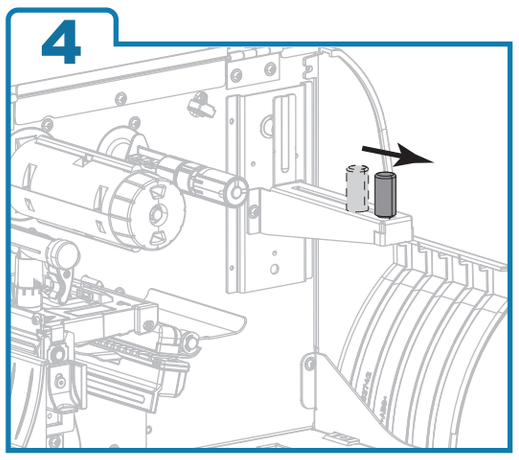

5

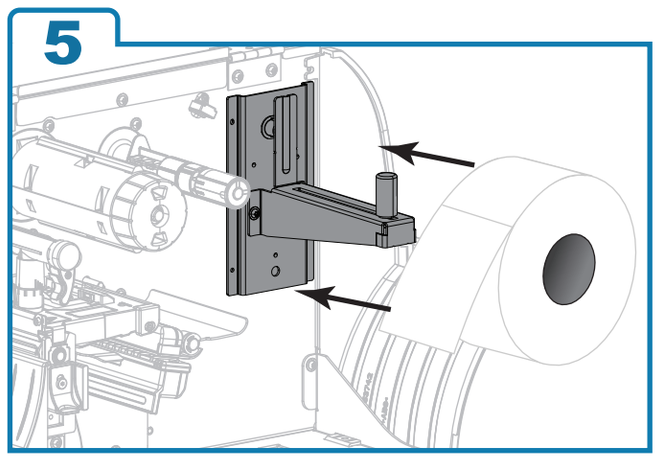

6

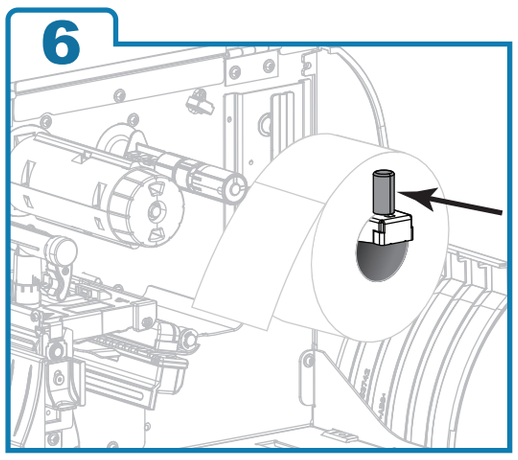

7

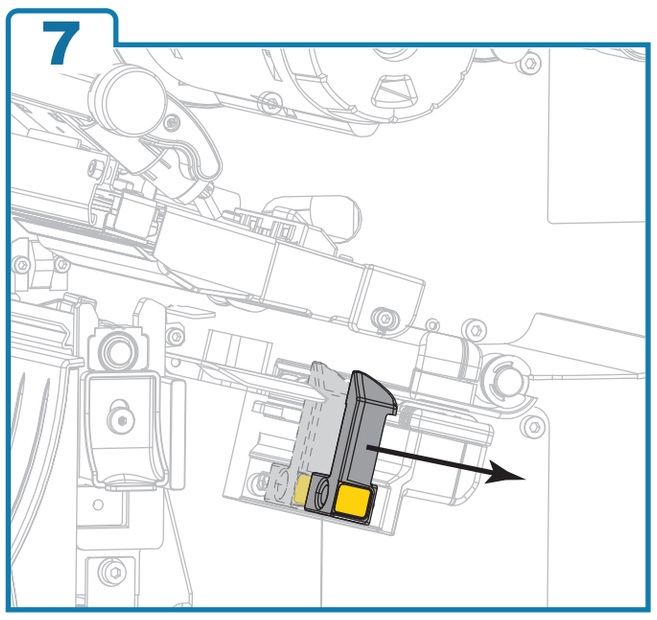

8

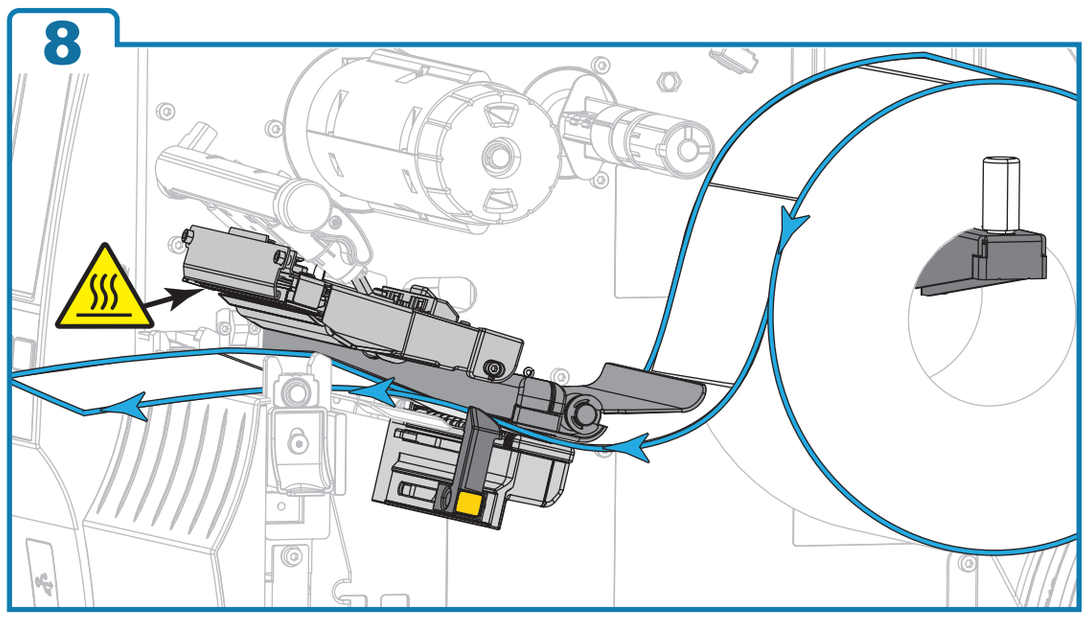

9

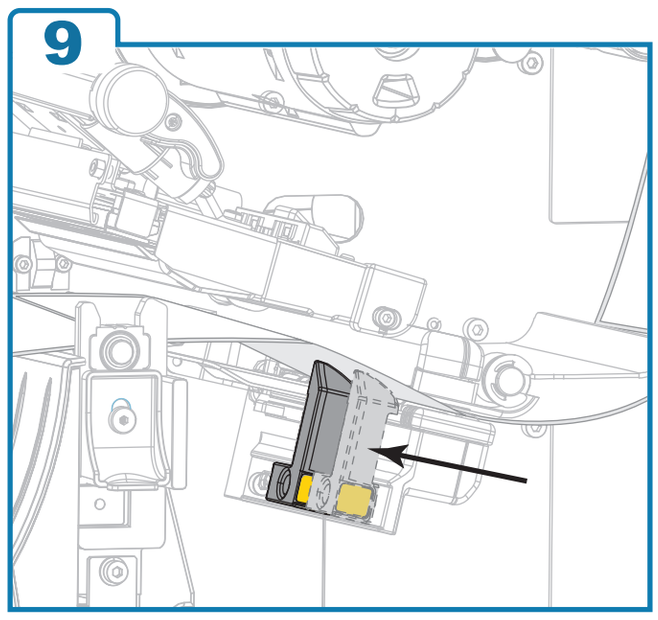

10

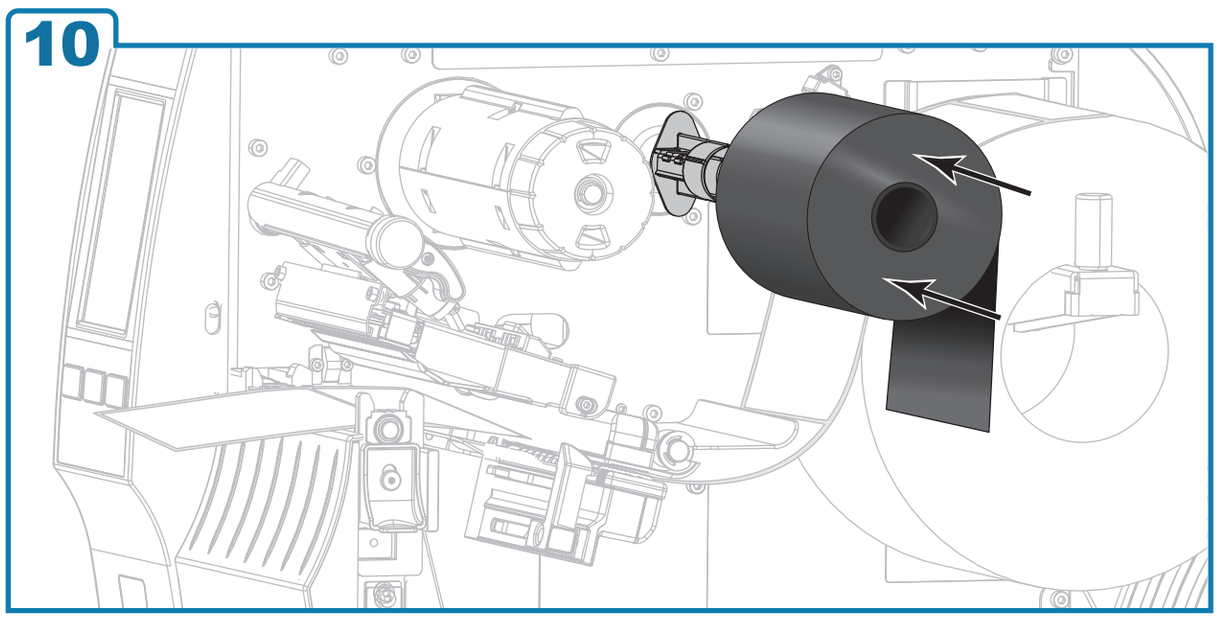

11

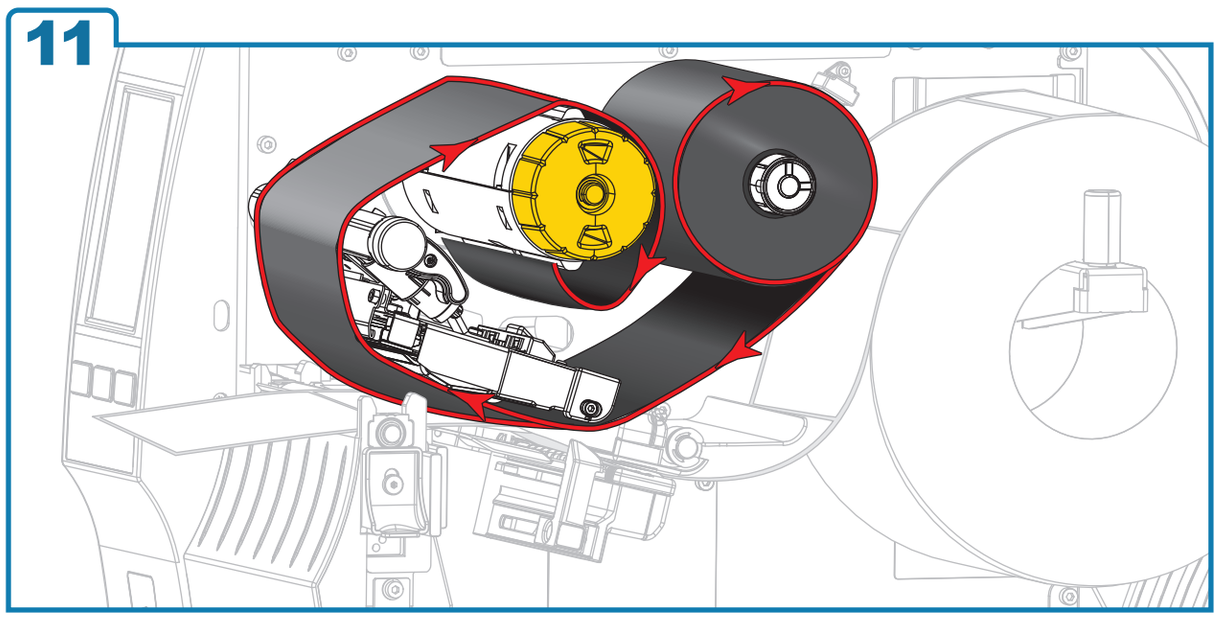

12

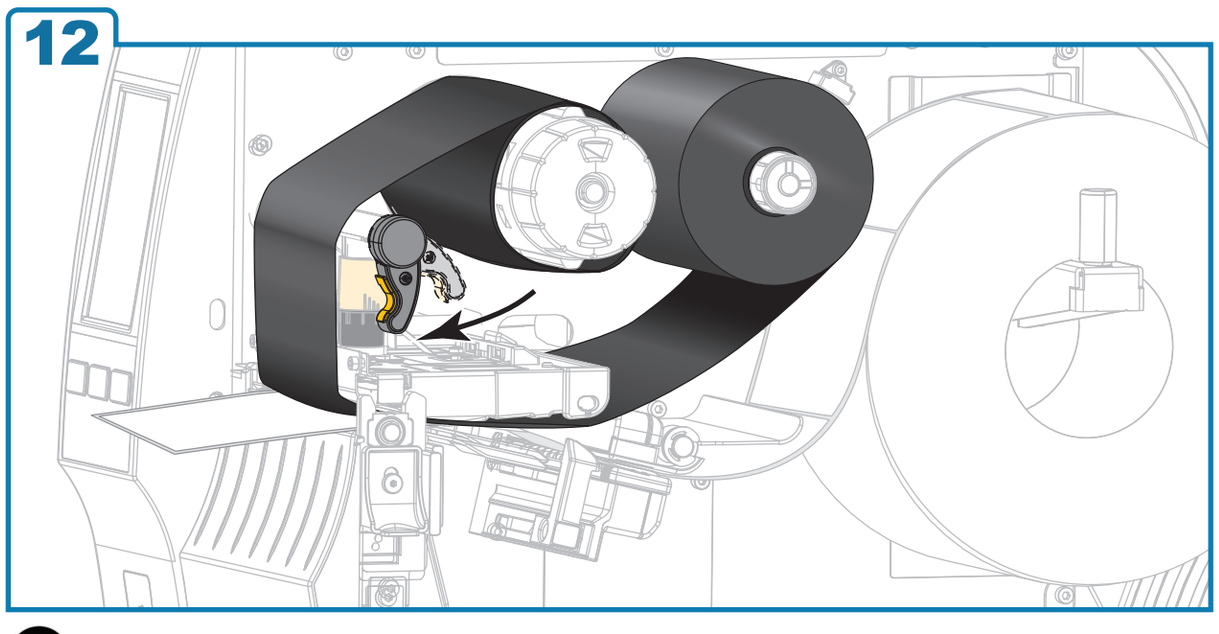

13

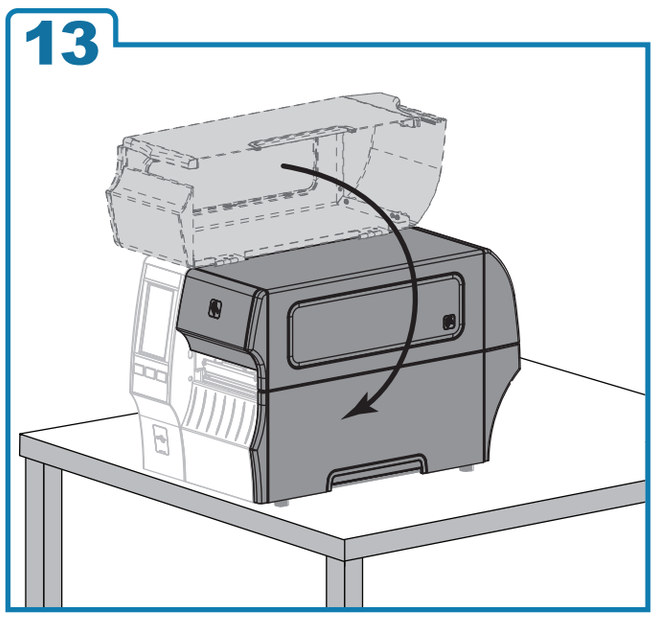

14

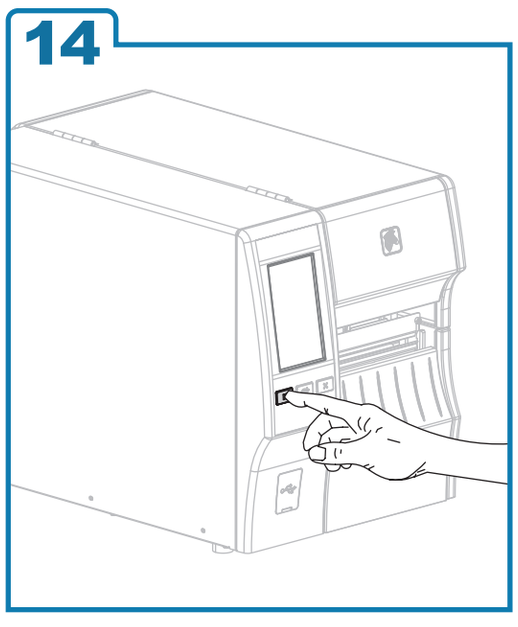

Printed in China on chlorine-free recycled paper.